MH 311 012/MOH 311 012/ MX 311 012 /MH 211 012
MH 311 015/MOH 311 015/ MX 311 015 /MH 211 015

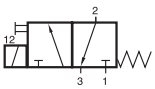

MH 311 012
MH 311 015

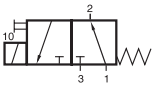

MOH 311 012
MOH 311 015

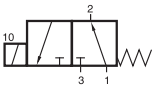

MX 311 012
MX 311 015

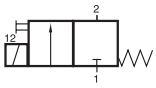

MH 211 012
MH 211 015

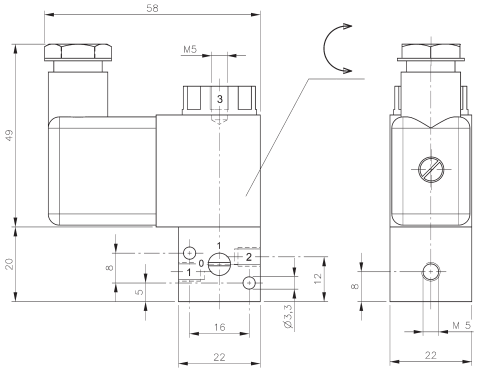

MH 311 012/MOH 311 012/MX 311 012/ MH 211 012

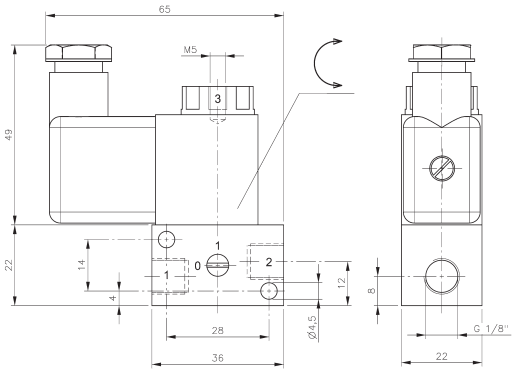

MH 311 015/MOH 311 015/ MX 311 015 MH 211 015

Direct acting 3/2-way and 2/2-way solenoid valve equipped with mechanical spring return.

Type MH 311 _ _ _
Normally closed, port 1 and 2 in the valve, port 3 at the top of the solenoid with manual override.

Type MOH 311 _ _ _
Normally open, port 2 and 3 in the valve, port 1 at the top of the solenoid with manual override.

Type MX 311 _ _ _
Normally open, port 1 and 2 in the valve, port 3 at the top of the solenoid, no manual override.

Type MH 211 _ _ _
2/2-way valve n.c. with manual override.

By closing port 3 3/2-way valves can be converted into 2/2-way version, not possible for MX.
Please note: Drawings are for MH 311 _ _ _-valves. For MOH-valves ports 1 and 3 are swapped, for MH 211 port 3 is not existing. Operator system of MX-valve is 8 mm longer. MOH 311 and MH 211-valves are equipped with a flat plastic nut.

Available with solenoid operators:
230V/50Hz, 110V/50Hz, 24V/50Hz, 48V=, 24V=, 12V=.

Valves can be used for technical vacuum too.

Type	Ways	Function	Port size 1	Port size 2	Port size 3	Air flow	Operating pressure	Power-consumption	Weight
MH 311 012	3/2	n.c.	M5	M5	M5	40 l/min	-0,9 - 10 bar	3 W = / 5 VA ~	0,12 kg
MH 311 015	3/2	n.c.	G 1/8”	G 1/8”	M5	50 l/min	-0,9 - 10 bar	3 W = / 5 VA ~	0,14 kg
MOH 311 012	3/2	n.o.	M5	M5	M5	40 l/min	-0,9 - 10 bar	3 W = / 5 VA ~	0,12 kg
MOH 311 015	3/2	n.o.	M5	G 1/8”	G 1/8”	50 l/min	-0,9 - 10 bar	3 W = / 5 VA ~	0,14 kg
MX 311 012	3/2	n.o.	M5	M5	hole	40 l/min	-0,9 - 8 bar	3 W = / 5 VA ~	0,13 kg
MX 311 015	3/2	n.o.	G 1/8”	G 1/8”	hole	50 l/min	-0,9 - 8 bar	3 W = / 5 VA ~	0,15 kg
MH 211 012	2/2	n.c.	M5	M5		40 l/min	-0,9 - 10 bar	3 W = / 5 VA ~	0,12 kg
MH 211 015	2/2	n.c.	G 1/8”	G 1/8”		50 l/min	-0,9 - 10 bar	3 W = / 5 VA ~	0,14 kg